ARISTON

SPARE PARTS EXPLODED VIEW
INSTANTANEOUS ELECTRIC WATER HEATERS
Model
AURES M 6/6.5

R8219567-01 - 13/01/2026

EN	FR	IT	ES	DE	NL

AURES M 6/6.5

Instantaneous Electric Water Heaters

Col	Reference	Model type	Begin	End
1	3195220	AURES M 6 EU	02-2021	-
2	3195234	AURES M 6	02-2021	-
3	3195579	AURES M 6 WH	04-2022	-
4	3195227	AURES M 6.5 240V US-1	08-2021	03-2025

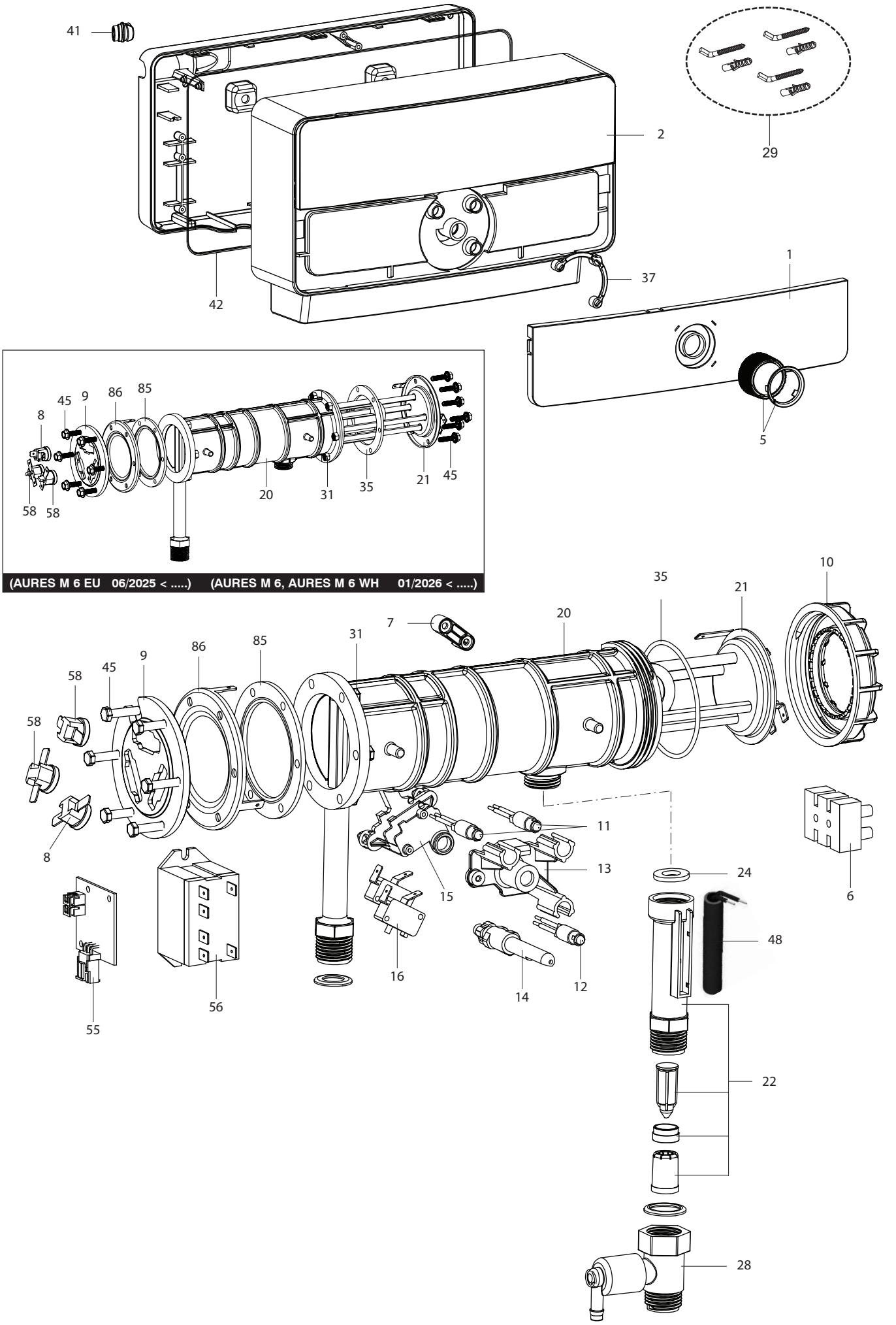
41
2
29
42
37
1
5
8
45
9
86
85
58
58
20
31
35
21
45
(AURES M 6 EU 06/2025 < .....) (AURES M 6, AURES M 6 WH 01/2026 < .....)
10
35
21
20
7
31
86
85
9
45
58
58
8
11
13
24
6
15
48
16
14
12
56
55
22
28

R8228634

	Description	Manf. Pt. N	Type	1 AURES M 6 EU	2 AURES M 6	3 AURES M 6 WH	4 AURES SM 6.5 US	5	6	7	8	9	10	11	12	13	14	15	16	17	18	From	to
0001	LOWER FRONT PANEL	65191140					●																
	LOWER FRONT PANEL	65191344				●																	
	LOWER FRONT PANEL	65191345		●	●																		
0002	FRONT COVER	65191270		●																		08/22	05/26
	FRONT COVER	65191270			●	●																08/22	
	FRONT COVER	65191270		●																		06/26	
	FRONT COVER	65191271					●																
0005	KNOB (REGULATION)	65191198		●	●	●	●																
0006	3-POLE TERMINAL BLOCK	6501066800		●																		05/25	05/26
	3-POLE TERMINAL BLOCK	6501066800			●	●																05/25	
	3-POLE TERMINAL BLOCK	6501066800		●																		06/26	
	3-POLE TERMINAL BLOCK	65191143					●																
	3-POLE TERMINAL BLOCK	65191101		●	●	●																	04/25
0007	CABLE CLAMP	65191069		●	●	●	●																
0008	FUNCTION THERMOSTAT 57C	65191130		●	●	●																	06/25
	FUNCTION THERMOSTAT 57C	65191130					●																
	THERMOSTAT 57°	6501010200		●	●	●																07/25	
0009	THERMOSTAT SUPPORT	6500916900		●																		06/25	06/25
	THERMOSTAT SUPPORT	6501010400		●	●	●																07/25	
	THERMOSTAT SUPPORT	65191132		●																			05/25
	THERMOSTAT SUPPORT	65191132			●	●																	06/25
	THERMOSTAT SUPPORT	65191132					●																
0010	BIG NUT FOR HEATING ELEMENT LOCK	65191119		●																			05/25
	BIG NUT FOR HEATING ELEMENT LOCK	65191119			●	●																	12/25
	BIG NUT FOR HEATING ELEMENT LOCK	65191119					●																
0011	SIGNAL LAMP (BLUE/BROWN - BLACK/PURPLE)	65191145		●	●	●	●																01/23
	SIGNAL LAMP (BLUE/BROWN - BLACK/PURPLE)	65191337		●																		02/23	05/26
	SIGNAL LAMP (BLUE/BROWN - BLACK/PURPLE)	65191337			●	●	●															02/23	
	SIGNAL LAMP (BLUE/BROWN - BLACK/PURPLE)	65191337		●																		06/26	
0012	SIGNAL LAMP (YELLOW/BLACK)	65191146		●	●	●	●																01/23
	SIGNAL LAMP (YELLOW/BLACK)	65191338		●																		02/23	05/26
	SIGNAL LAMP (YELLOW/BLACK)	65191338			●	●	●															02/23	
	SIGNAL LAMP (YELLOW/BLACK)	65191338		●																		06/26	
0013	LED HOLDER	65191113		●	●	●	●																
0014	SPINDLE (KNOB)	65191070		●	●	●	●																
0015	SPINDLE HOLDER	65191071		●	●	●	●																
0016	MICROSWITCH (KNOB SELECTOR)	65191127		●	●	●	●																
0020	CANISTER	6500917000		●																		06/25	
	CANISTER	6500917000			●	●																01/26	
	CANISTER	65191133		●																			05/25
	CANISTER	65191133			●	●																	12/25
	CANISTER	65191141					●																
0021	HEATING ELEMENT 5.5KW 220V	65155102					●																
	HEATING ELEMENT 6KW 220V	6501010100		●																		06/25	
	HEATING ELEMENT 6KW 220V	6501010100			●	●																01/26	
	HEATING ELEMENT 6KW 220V	65155098		●																			05/25
	HEATING ELEMENT 6KW 220V	65155098			●	●																	12/25
0022	INLET PIPE ASSEMBLY	65191121		●	●	●																	
	INLET PIPE ASSEMBLY	65191147					●																
0024	INLET PIPE GASKET	65191100		●	●	●	●																
0028	SAFETY VALVE for 5.5 kw	65191126		●	●	●	●																
0029	INSTALLATION KIT	65191129		●	●	●	●																
0031	NUT M5	65191367		●	●	●																	
0035	O-RING	6500917100		●																		06/25	
	O-RING	6500917100			●	●																01/26	
	O-RING	65191095		●																			05/25
	O-RING	65191095			●	●																	12/25
	O-RING	65191095					●																
0037	LED INDICATOR	65191118		●	●	●	●																
0041	CABLE BUSHING	65191077		●	●	●	●																
0042	COVER GASKET	65191078		●	●	●	●																
0045	BOLT M5X20	6501010300		●																		06/25	
	BOLT M5X20	6501010300			●	●																01/26	
	BOLT M5X20	65191366		●																			05/25
	BOLT M5X20	65191366			●	●																	12/25
0048	REED SENSOR (COMPLETE)	65191125		●	●	●	●																
0055	CONTROL BOARD	6500773700		●	●	●	●																
0056	RELAY	65191128		●	●	●	●																
0058	SAFETY THERMOSTAT 85C	65191131		●	●	●	●																
0085	FLANGE GASKET	65191134		●	●	●	●																
0086	CANISTER FLANGE	65191135		●	●	●	●																

LIST OF THE ABBREVIATIONS

HW	: Hot water.
CW	: Cold water.
C	: Ceramic resistance (normal heating).
Ca	: Ceramic resistance (accelerated heating)
TP	: Immersion heater.
1F	: With fittings.
2F	: Without fittings.
3F	: With fittings and another outlet connection.
AMI	: With mixing valve.
SMI	: Without mixing valve.
PUISS	: Power of th appliance.
PN	: Appliance with normal pression.
LP	: Appliance with low pression.
PV	: Appliance with variable power.
PF	: Appliance with fixed power.

IDENTIFICATION PLATE

SERIAL NUMBER

6 Characters : 03 09 08
- Year of manufacture
- Manufacturing day
- Month of manufacture

9 Characters : 5 9 12 0606
- Year of manufacture
- Month of manufacture
- Sequencial number

14 Characters : SI-V-0B0 45 07 0001
- Sequencial number
- Year of manufacture : 6 → 2004, 7 → 2005, 8 → 2006 etc ...
- Month of manufacture : 25 → January, 13 → February, 32 → March, 35 → April, 39 → May, 45 → June, 43 → July, 29 → August, 40 → September, 38 → October, 51 → November, 12 → December
- Product model

14 Characters : 111518 XX 000010
- Month of manufacture
- Day of manufacture
- Sequencial number
- Year of manufacture

15 Characters : 02 11 00001 007843
- Year of manufacture
- Month of manufacture
- Product reference
- Sequencial number

21 Characters : 3200050 XX 08115 0000001
- Product reference
- Sequencial number
- Year (08) / Manufacturing day (115)

22 Characters : 3200050 XX 070115 0000001
- Product reference
- Sequencial number
- Year (07) / Month (01) / Manufacturing day (15)

The indications mentionned on the prices, commercial or technical literature and the scheme are written for your guidance and are available at a given time. The CONSTRUCTOR retains the power to modify the presentation, the form, the size, the conception or the material of the products.